شركة الصناعات الوطنية
NATIONAL INDUSTRIES COMPANY
www.nicbm.com | 1 844 555
national_industries

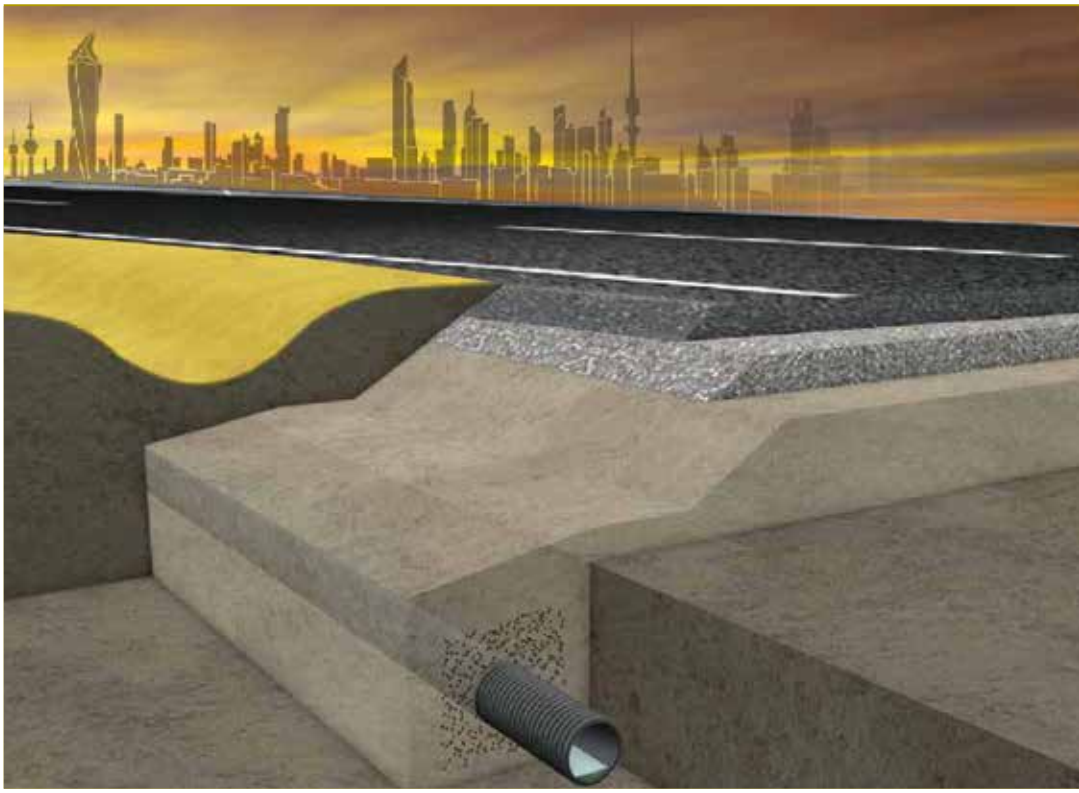

DRAINTUBE

NIC Catalogues

NIC Products

NIC Draintube

Draintube uPVC, SN4, SN8 & SN16

Application: Drainage of roads, airfields, railways, parking lots, sports facilities and anywhere where increased demands are placed on drainage pipes.

- Depth of pipe trench min 1.2 m to 6 m max
- Maximum loading max 18 Ton/axel
- Ring stiffness SN4 KN/m², SN8 KN/m² or SN16 KN/m²
- Connection with EPDM or rubber (EN 681) seal in socket OR Solvent Socket
- Length 1 to 6m

Material /raw material	:	uPVC (Unplasticized Poly vinyl chloride)
Specification	:	According to DIN 4262-1, type R3, as LP and MP
Nominal diameter DN	:	110 160 200 250 315 400
length	:	6 m
perforation	:	According to DIN 4262-1; width of slots 2.5 ± 0.3 mm
Total perforation area	:	≥ 50 cm²/m; LP and MP
Ring stiffness	:	SN4, SN8 or SN16 (4, 8 or 6 KN/m²) according to DIN EN ISO 9969
System of connection	:	With couplings an EPDM sealing rings according to DIN EN 681 (DIN 4060)

Nominal Size	Mean outside diameter mm BSEN 1401-1		Wall Thickness mm (Min) BSEN 1401-1		
	D min	D max	SN4 (SDR 41)	SN8 (SDR 34)	SN16 (SDR 27.6)
110	110.0	110.3	3.2	3.2	4.0
160	160.0	160.4	4.0	4.7	5.8
200	200.0	200.5	4.9	5.9	7.3
315	315.0	315.6	7.7	9.2	11.4
400	400.0	400.7	9.8	11.7	14.5

Draintube, HDPE Corrugated, SN8

Application: drainage of roads, airfields, railways, sports facilities and anywhere where increased demands are placed on drainage pipes.

- Made from high density polyethylene (HDPE)
- Structured-wall
  (corrugated outside, smooth inside),
- Color: black inside and outside,
- Heavy duty
  (SN 8 according to DIN EN ISO 9969)
- Supplied with a socket on one end.
- A sealing ring is fitted in the factory onto the second trough of the spigot end of pipe.
- All pipes are supplied in 6m length.

totally perforated (TP), locally perforated (LP) and multi-purpose (MP) pipe,

Material /raw material	HDPE (High Density Polyethylene)
Specification	According to DIN 4262-1, type R2,
Structured-wall	design according to DIN EN 13476
Nominal diameter (DN) / Inside diameter (mm)	100 150 200 250 300 350 400 500
Perforation	According to DIN 4262-1, slot width 2.5 + 0.4 mm; ≥ 50 cm²/m
Ring stiffness	SN 8 (8 KN/m²) according to DIN EN ISO 9969
Jetting resistance	According to DIN 19523
Impact resistance	According to DIN 4262-1 For DN ≤ 150 H50 = 1,2 m; For DN ≥ 200 H50 = 1,8 m
Creep ratio	< 4.7 according to DIN EN ISO 9967
Pipe connection	Coupling and sealing ring made from EPDM, according to DIN EN 681 (DIN 4060)

Slotting according to DIN 4262-1;
width of slots 2.5 ± 0.3 mm

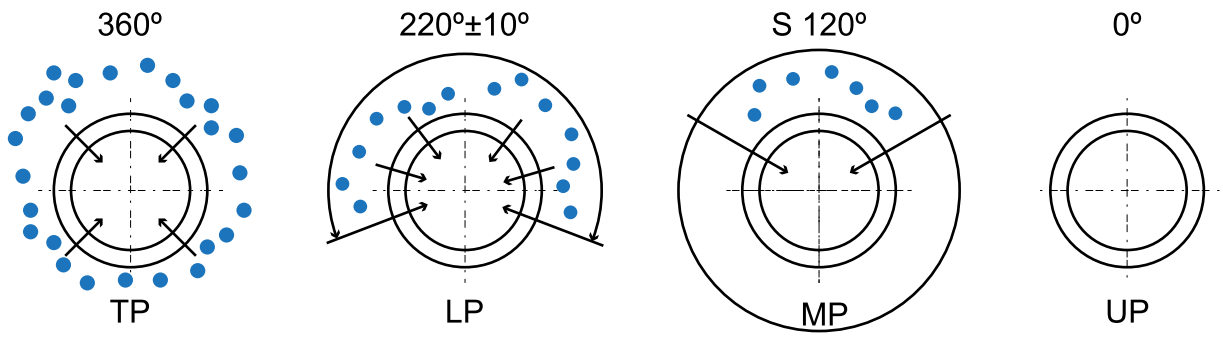

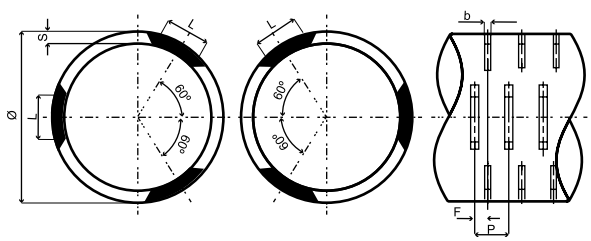

TP
Fully Slotted
Over the entire pipe circumference 360º

LP
Partially Slotted
Slotting covering pipe circumference 220º

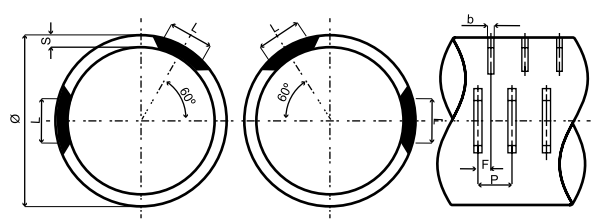

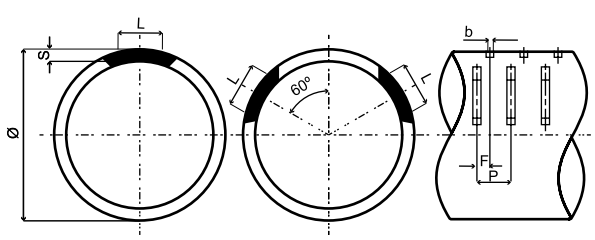

MP
Multipurpose
Slotting covering pipe circumference 120º

UP
Unslotted
Pipe for drainage of water.

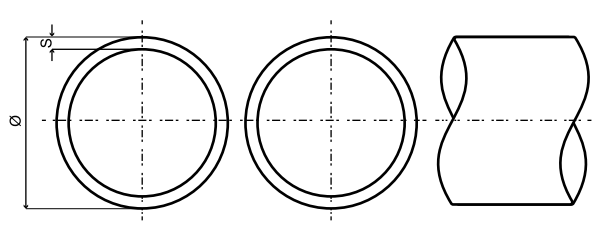

Draintube, HDPE Plain, Hole perforated.

Application: Gas collection in landfill.

- Can also be used for drainage of roads, airfields, railways, sports facilities.
- Horizontal installation only. Not recommended for vertical installation.
- Made from high density polyethylene (HDPE)
- Plain wall (smooth outside, smooth inside),
- Color: Black
- Light to Heavy duty (SDR 26, SDR 17 & SDR 11)
- Supplied with plain ends. Joining by Butt welding process.
- All pipes are supplied in 12m length. or length as per customer requirement.

totally perforated (TP), locally perforated (LP) and multi-purpose (MP) pipe,

Material /raw material	HDPE (High Density Polyethylene)
Specification	• Pipe design according to ISO 4427 & DIN 8074 / 8075 • Pipe design according to ASTM F810
Nominal diameter (DN) / Inside diameter (mm)	110 160 200 225 250 315 355 400 450 500
Perforation	AASHTO M252 / M294 or ASTM F810 According to DIN 4262-1, type R3, Round holes staggered.
Ring stiffness	SN 8 (8 KN/m²) according to DIN EN ISO 9969
Jetting resistance	According to DIN 19523
Impact resistance	According to DIN 4262-1 • For DN ≤ 150 H50 = 1,2 m; • For DN ≥ 200 H50 = 1,8 m
Creep ratio	< 4.7 according to DIN EN ISO 9967
Pipe connection	Butt Welding or Coupler

Recommended perforation style

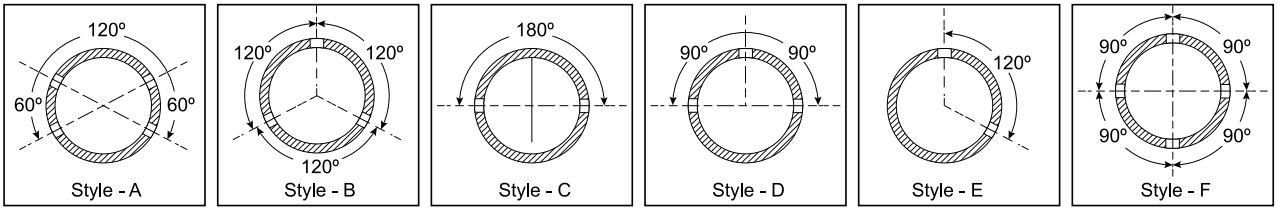

Fig1 – AASTHO M294 Class 2 and Trade standard

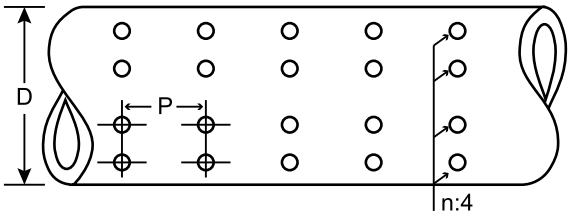

Fig 2 – Non Staggered

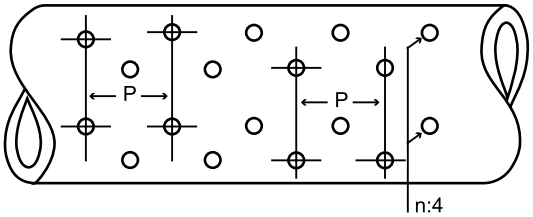

Fig 3 – Staggered

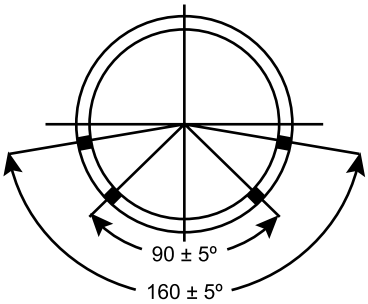

For size 160mm to 250mm

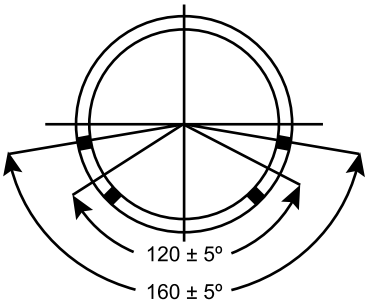

For size 315mm to 500mm

Fig 4 ASTM F810 / ASSHTO M252 / M294 Class 1

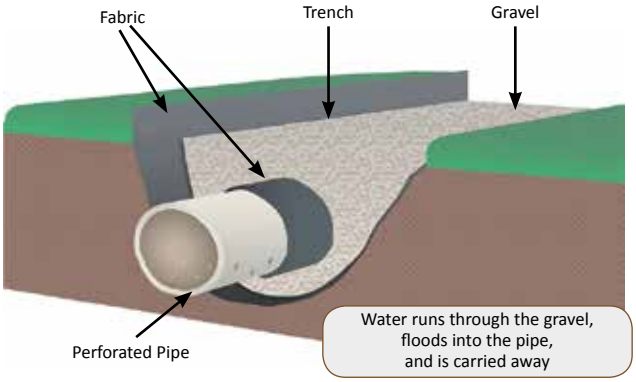

Fig 5 Drainage application

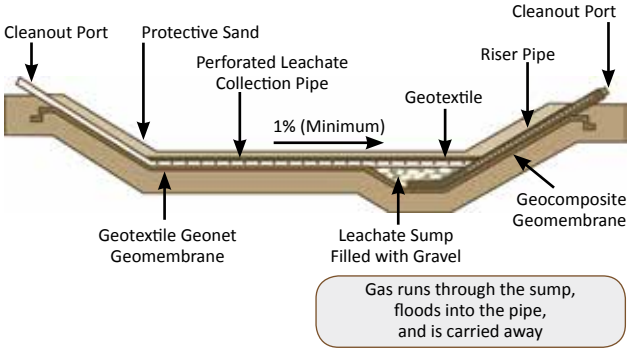

Fig 6 Landfill Leachate collection

Draintube Installation

1. Transportation and storage of pipes.

- The pipes should not be dropped or thrown from vehicles and impacts should be avoided. In addition, DIN EN 1610 (Section 8) also applies.
- The storage time should be restricted to a maximum of one month to prevent harmful effects of UV exposure on material properties.
- During extreme summer heat, pipes should be protected against overheating.
- It is recommended that the pipes should be stored in the shade or covered with brightly coloured, UV resistant tarpaulin.
- Store the pipes on even ground that is sufficiently hard to prevent deformations.

2. Creating Trench

DIN EN 1610 (Section 6) applies as regards dimensioning and design, trench width, trench stability, trench bottom and drainage. In addition, the dimensions of the pipe static calculation according to DWA-A 127 “Directive for the static calculation of drains and sewers”

3. Bedding, embedding and support

Bedding design and embedding of the pipes considerably affect the load and stress distribution on the pipe circumference and are very important for the static strength and the resulting deformation of pipes. The execution must comply with DIN EN 1610 (Section 7) and DWA-A 139. The bedding area must be level and free of stones. Use non-cohesive or slightly cohesive, compactable material to create the bedding area only. Likewise, use stoneless, non-cohesive, compactable material in the embedding area only for reasons of pipe statics. This generally applies to all permeable layers. Use compactable material containing fine fraction to create a permeable base (trench bottom up to perforations). We recommend using soils of the G2 group (slightly cohesive soils – GU, GT, SU, ST). These both comply with the requirements of pipe statics and hydraulic requirements for permeable bases. This guarantees sufficient hydraulic performance in combination with the overlying permeable layer which is made of material of the G1 group

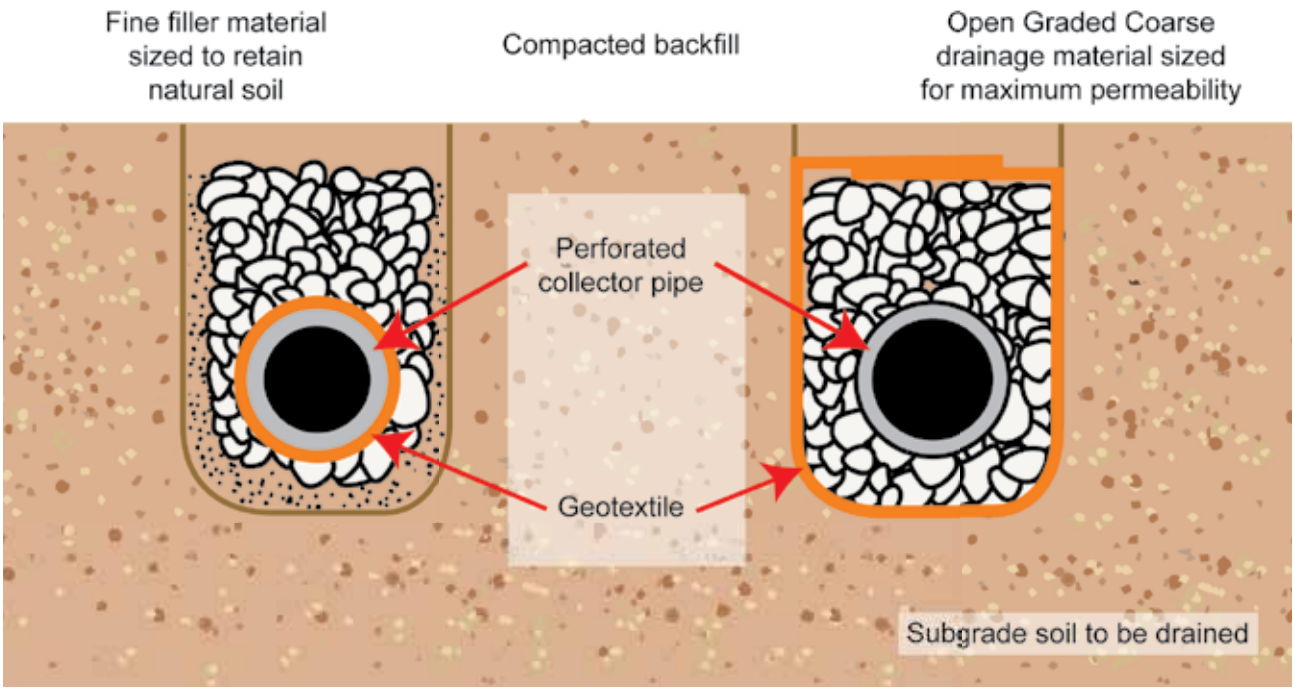

4. Installation

Adhere to the provisions of DIN EN 1610 (Section 8). Place the pipes on the prepared bedding. With Draintube locally perforated (LP) and multi-purpose (MP) pipes, the slotting must be observed to position the perforations correctly (upwords). Use couplings to connect the pipes to each other. Sealing rings or solvent cement produce watertight connections between UPVC pipes. For HDPE Corrugated Draintube, water tight connection is achieved by mounting a profile sealing ring onto the second corrugation trough. (Please note: Apply a sufficient amount of lubricant to the inside of the coupling and the profile sealing ring!)

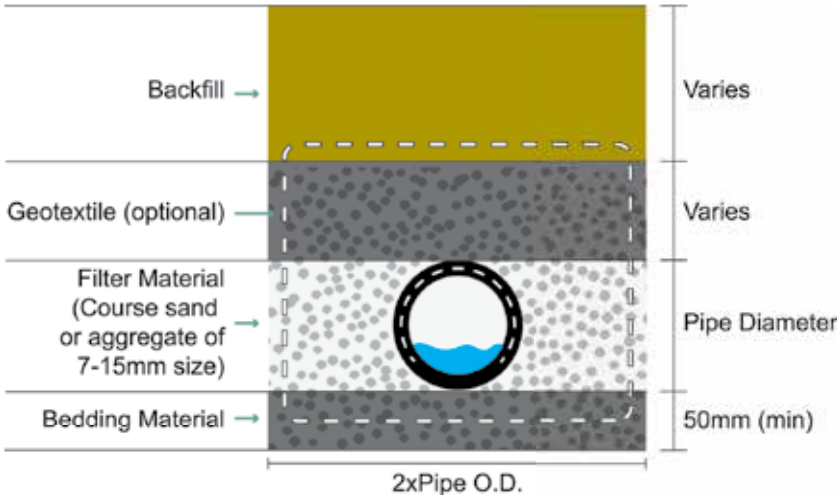

Insert pipes in the coupling until they reach the limit stop. Use a fine-toothed saw or circular saw to cut pipes. Cuts in HDPE corrugation troughs must be at right angles! Use grater, planer or file to remove rough edges and burrs on the cutting surfaces. Use couplings to reuse remaining pieces. Pipe lengths must be secured to prevent shifting or upthrust of pipes while creating the embedding.

5. Backfilling and compacting

The provisions of DIN EN 1610 and DWA-A 139 generally apply. Carry out backfilling according to design specifications. It includes side filling, covering within the embedding area,

and main backfilling. Create the embedding of the pipe in the embedding area with stoneless, compactable material (see Section 3). Backfill the bedding material evenly on both sides of the pipe above the pipe crown in layers of approx. 15 cm, and compact using light compaction equipment only or, if required, even by hand. Any in-situ soil must be prevented from entering the embedding or the displacement of material from the embedding to the in-situ soil (filter stability!). This might require the integration of suitable filter gravel or dimensioning and installing a filter fabric around the dry packing (gravel). Further filling (as of approx. 15 cm above the pipe crown) must be made in layers with constant compaction of the filling material. Mechanical compaction of main backfilling using light to medium compaction equipment directly above the pipe should only be performed starting from a minimum thickness of 30 cm above the pipe crown. Use heavy compaction equipment only starting from a depth of

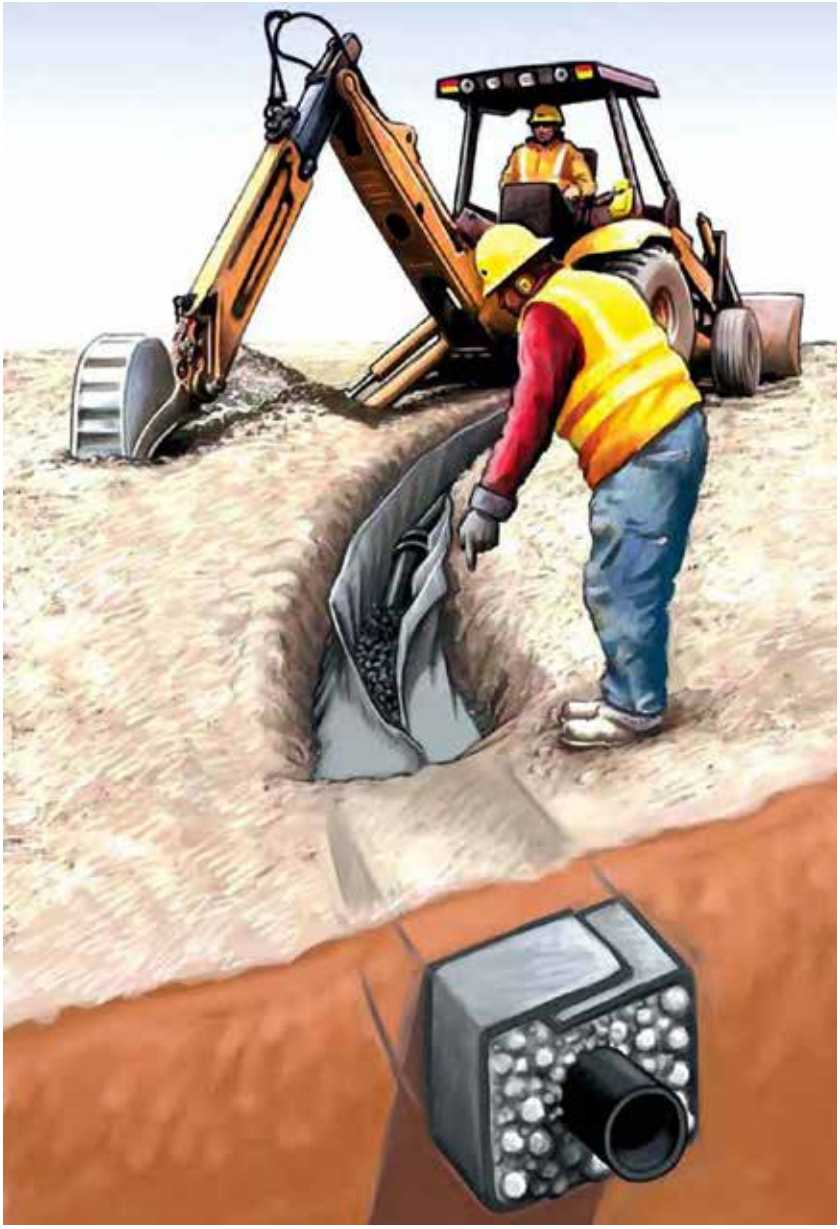

cover of 1.0 m above the pipe crown. Choose compaction equipment, the number of compaction runs and the thickness of layers subject to compaction depending on the material to be compacted and the pipe system to be installed. To avoid load concentration on the pipe, consistent compaction throughout the entire embedding area must be ensured. In addition, the pipes must not come in contact with compaction equipment. Preferably secure the pipes from lateral and vertical forces during installation.

Sales Outlet

Our Division at Abyat Showroom

Shuwaikh Industrial Area
Canada Dry Street
Abyat Showroom
Contact: 1848000

Working Hours*:
Saturday - Friday
8:00am - 10:00pm

Headquarter Shuwaikh

South Shuwaikh
intersection of Jahra Road
and the Airport Road,
Next to the
Red Crescent Society.

Tel: 24642100
Kuwait Hotline: 1844555

Working Hours*:
Sunday - Thursday
7:30am - 3:00pm

Sulaibiya

Tel: 24642200

Working Hours*:
Saturday - Thursday
7:30am - 3:00pm

Western Industrial Shuaiba

Tel: 24642300
Ceramics Factory:
23262714/10

Working Hours*:
Saturday - Thursday
7:30am - 3:00pm

Ceramics Showroom

Industrial Shuwaikh
Humaidhi Complex
Opposite to Bin Nisf Co.
Tel: 24950871/2
Factory: 23262714/10

Working Hours*:
Saturday - Thursday
9:00am - 9:00pm

Industrial Shuwaikh Showroom

Industrial Shuwaikh2
Block1 - Area 92
Al-Zaben Complex
Shops : 12,13,14
Tel. : 24642101/2/3/4/9
Fax : 24642110

Working Hours*:
Saturday - Thursday
7:00am-9:00pm

For any sales inquiry: Fax: +965 24642063 - Email: sales@nicbm.com
* Working hours are subject to change according to holidays and occasions

National_Industries

National Industries

NICKuwait1

Inquiries & Sales: 1844555

ROYALCERT INTERNATIONAL REGISTRARS
ISO 9001:2015 | 14001:2015 | 18001:2007

NATIONAL INDUSTRIES COMPANY
شركة الصناعات الوطنية
Since 1960
www.nicbm.com
1 844 555

nqa.
ISO 9001
QUALITY MANAGEMENT
UKAS
MANAGEMENT SYSTEMS
0015